CH-ALT24HP24V-230VO + CH-STM18AHU24V

Job Name:		**Date:**	
Location:		**Approval:**	
Engineer:		**Construction:**	
Submitted to:		**Unit #:**	
Submitted by:		**Drawing #:**	
Reference:			

KEY FEATURES:

- 24V Communication
- Advanced Inverter Technology
- Up to 45% Energy Savings
- Side Discharge
- Compatible when paired with 3rd Party 24V Communication Units
- Standard pipeline sizes for easy unit replacement
- Up to 25% Quieter Performance
- Smaller Overall Footprint

NOTES:

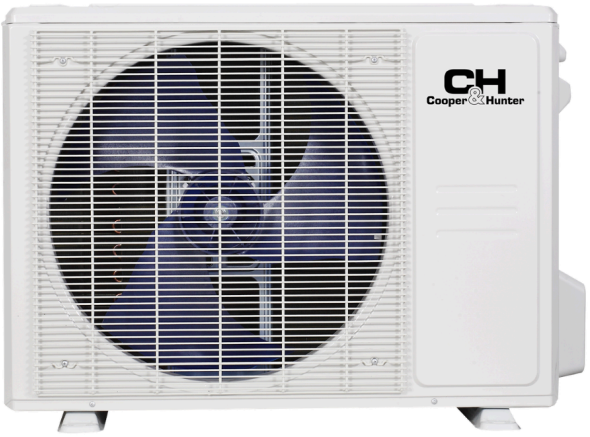

Cooper&Hunter products are subject to continuous improvements. Cooper&Hunter reserves the right to modify product design, specifications and information in this data sheet without notice and without incurring any obligations. Actual unit design may differ from images shown in this submittal sheet.

CH-ALT24HP24V-230VO + CH-STM18AHU24V

Indoor Model			CH-STM18AHU24V
Power supply		V, Ph, Hz	115/208/230V,60Hz
Communication wiring		AWG	20x2
Cooling	Capacity	Btu/h	20,000 (6,500~23,000)
	Input	w	2,300 (550~3,050)
	Rated current	A	10 (3.5~13.5)
	EER/EER2	Btu/w	8.9
	SEER/SEER2	Btu/w	16.3
Heating at 47 °F	Capacity	Btu/h	20,000 (7,700~20,000)
	Input	W	2,550 (600~2,550)
	Rated current	A	11 (3.7~11)
	COP	W/W	2.34
	HSPF4/HSPF2-4		7.5
	HSPF5/HSPF2-5		6.2
Indoor fan motor	Qty		1
	Input		250
	RLA		3
Indoor air flow (Turbo/Hi/Med/Lo) (No duct)		CFM	618.0 / 576.8 / 529.7 / 488.5 / 488.5
ESP (range)		In.wg.	0-0.8 In.W.G
Indoor noise level (Hi/Med/Lo)		dB(A)	48.0/47/45/39/39
Dehumidification		L/H	3.80
Indoor unit	Dimensions (WxDxH)	inch	20-1/4 x 15-3/4 x 36-1/2
	Packing (WxDxH)	inch	22-7/8 x 19-1/2 x 42-7/8
	Net/Gross weight	lbs	91 / 111
Drainage water pipe diameter		inch	3/4"
Refrigerant piping (Liquid side/Gas side)		inch	3/8" 3/4"
Design pressure		PSIG	550 / 340
Controller			120N/24V
Room temperature	Cooling	F	60~90
	Heating	F	60~90

Cooper&Hunter products are subject to continuous improvements. Cooper&Hunter reserves the right to modify product design, specifications and information in this data sheet without notice and without incurring any obligations. Actual unit design may differ from images shown in this submittal sheet.

CH-ALT24HP24V-230VO + CH-STM18AHU24V

Outdoor Model			CH-ALT24HP24V-230VO
Power supply		V, Ph, Hz	208-230V, 1Ph, 60Hz
Min. circuit ampacity		A	20
Max. fuse		A	25
Compressor	Model		KTM240D46UKT2
	Type		TWIN-ROTARY
	Brand		GMCC
	Capacity	Btu/h	N/A
	Input	w	2,045
	Rated current (RLA)	A	15
	Refrigerant oil	oz	VG74
Outdoor fan motor	Qty		1
	Input	w	34
	RLA	A	1
	Speed	r/min	900/700/500
Outdoor air flow (Max)		CFM	1,441
Outdoor noise level (Max)		dB(A)	53
Throttle type			EXV
Outdoor unit	Dimensions (WxDxH)	inch	31-3/4 x 13 x 21-3/4
	Packing (WxDxH)	inch	36 x 14-9/16 x 24-3/16
	Net/Gross weight	inch	79 / 86
Refrigerant	Type		R454B
	Precharge	ft	24.6
Additional charge for 1/4 inch liquid pipe		oz	
Additional charge for 3/8 inch liquid pipe		oz	.7 oz/ft
Refrigerant piping	Liquid side/Gas side	inch	3/8" 3/4"
	Max. pipe length	ft	164'
	Max. difference in level	ft	82'
Ambient temperature	Cooling	F	-13~122
	Heating	F	-13~75

Cooper&Hunter products are subject to continuous improvements. Cooper&Hunter reserves the right to modify product design, specifications and information in this data sheet without notice and without incurring any obligations. Actual unit design may differ from images shown in this submittal sheet.

Indoor Unit Dimension

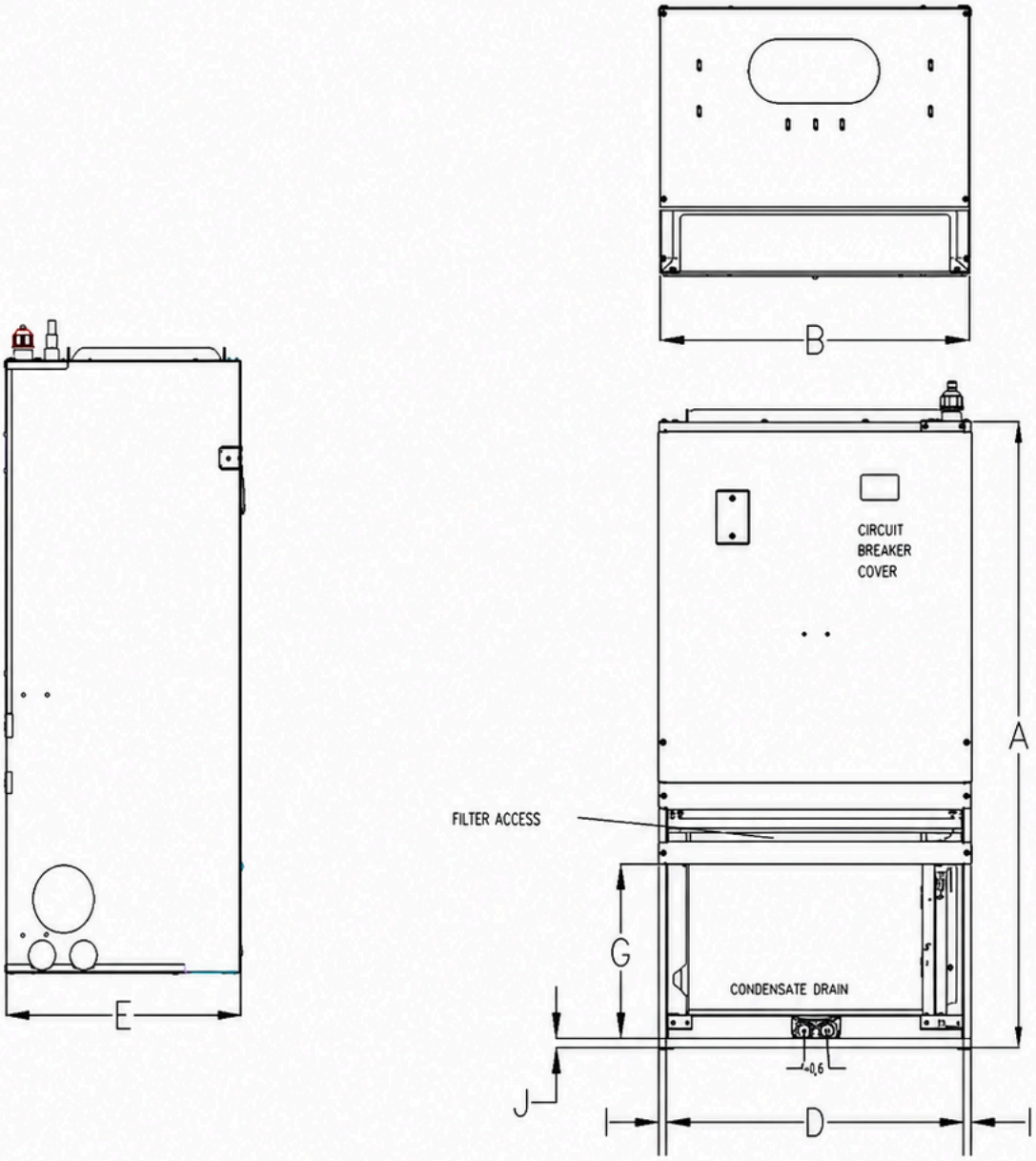

Dimensions	Model(Btu/h)	18K/24K		30K/36K	
		inch	mm	inch	mm
A	Model Height	36.5	928	49	1017
B	Model Width	20.3	515	21	559
C	Supply Air Opening Width	17.4	442	18.8	478.6
D	Return Air Opening Width	19.4	493.8	21.2	537.8
E	Model Depth	15.7	399	21	4.83
F	Supply Air Opening Depth	10.4	265.2	9.3	235.4
G	Return Air Opening Depth	10.3	261	13.1	332.5
H	Supply Air Opening Clearance	1.1	29.1	1.6	41
I	Return Air Opening Side Clearance	0.42	10.6	0.42	10.6
J	Return Air Opening Front Clearance	0.47	12	0.63	16

Cooper&Hunter products are subject to continuous improvements. Cooper&Hunter reserves the right to modify product design, specifications and information in this data sheet without notice and without incurring any obligations. Actual unit design may differ from images shown in this submittal sheet.

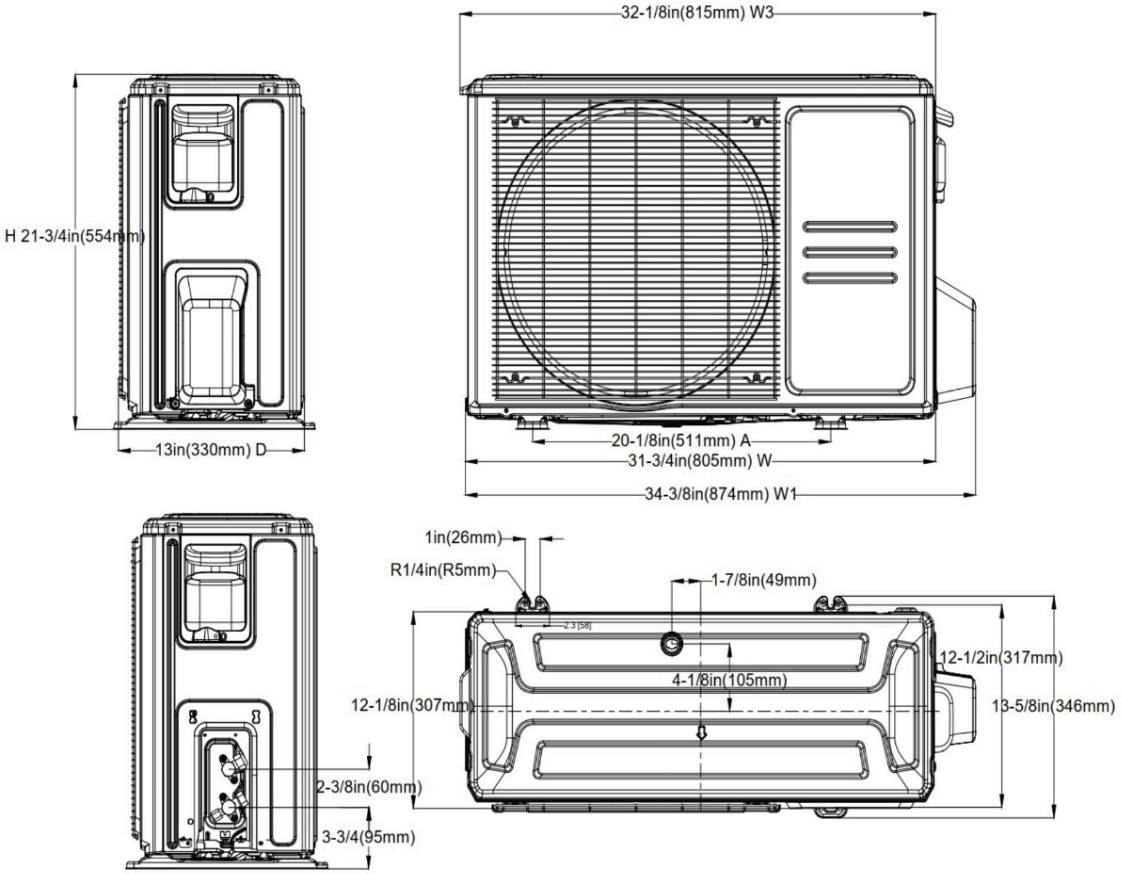

Installation Instruction For Outdoor Unit

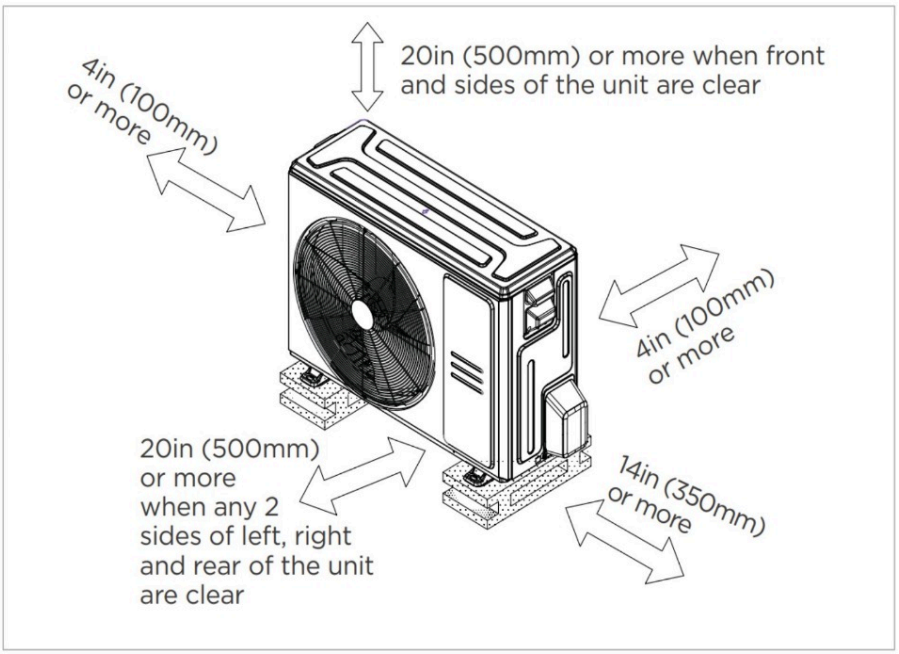

☑ Meets all spatial requirements shown in Installation Clearance Requirements above.

Cooper&Hunter products are subject to continuous improvements. Cooper&Hunter reserves the right to modify product design, specifications and information in this data sheet without notice and without incurring any obligations. Actual unit design may differ from images shown in this submittal sheet.