CH-ALT30HP24V-230VO + CH-ACL30-36B

Job Name:		**Date:**	
Location:		**Approval:**	
Engineer:		**Construction:**	
Submitted to:		**Unit #:**	
Submitted by:		**Drawing #:**	
Reference:			

KEY FEATURES:

- Heat pump operation for heating and cooling
- Inverter-driven variable-capacity compressor
- 24V communicating controls
- 1.5 to 5 ton capacities
- R-454B refrigerant
- High SEER2 efficiency
- Quiet, soft-start operation
- Multi-position indoor coil installation
- Compatible with existing furnaces
- TXV valve and flared connections
- GoldFin anti-corrosion aluminum coil
- R-454B refrigerant sensor
- Easy-access coil maintenance
- Efficient condensate drainage

NOTES:

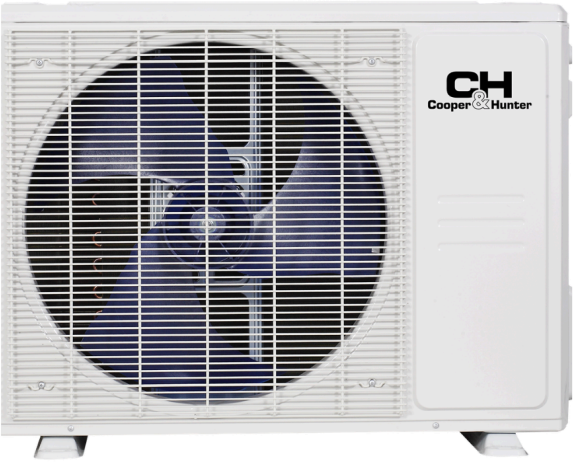

Cooper&Hunter products are subject to continuous improvements. Cooper&Hunter reserves the right to modify product design, specifications and information in this data sheet without notice and without incurring any obligations. Actual unit design may differ from images shown in this submittal sheet.

CH-ALT30HP24V-230VO + CH-ACL30-36B

Indoor Model			CH-ACL30-36B
Power supply		V, Ph, Hz	24V,60Hz,1Ph
Communication wiring		AWG	20x2
Cooling	Capacity	Btu/h	8,000~28,000
	Input	w	3,050(600~3,050)
	Rated current	A	11.7(2.0~11.7)
	EER/EER2	Btu/w	9.2
	SEER/SEER2	Btu/w	14.8
Heating at 47 °F	Capacity	Btu/h	7,600~28,000
	Input	W	500~2,560
	Rated current	A	1.5~10.3
	COP	W/W	3.2
	HSPF4/HSPF2-4		8.2
	HSPF5/HSPF2-5		6.5
Indoor fan motor	Qty		1
	Input		/
	RLA		/
Indoor air flow (Turbo/Hi/Med/Lo) (No duct)		CFM	/
ESP (range)		In.wg.	/
Indoor noise level (Hi/Med/Lo)		dB(A)	/
Dehumidification		L/H	8.4
Indoor unit	Dimensions (WxDxH)	inch	17-1/2x21x23-1/2
	Packing (WxDxH)	inch	20-1/2x26-1/8x26-3/8
	Net/Gross weight	lbs	59.5/68
Drainage water pipe diameter		inch	3/4"
Refrigerant piping (Liquid side/Gas side)		inch	3/8" 3/4"
Design pressure		PSIG	550 / 340
Controller			120N/24V
Room temperature	Cooling	F	60~90
	Heating	F	60~90

Cooper&Hunter products are subject to continuous improvements. Cooper&Hunter reserves the right to modify product design, specifications and information in this data sheet without notice and without incurring any obligations. Actual unit design may differ from images shown in this submittal sheet.

CH-ALT30HP24V-230VO + CH-ACL30-36B

Outdoor Model			CH-ALT30HP24V-230VO
Power supply		V, Ph, Hz	208-230V, 1Ph, 60Hz
Min. circuit ampacity		A	20
Max. fuse		A	25
Compressor	Model		KTM240D46UKT2
	Type		TWIN-ROTARY
	Brand		GMCC
	Capacity	Btu/h	N/A
	Input	w	3050
	Rated current (RLA)	A	11.7
	Refrigerant oil	oz	VG74
Outdoor fan motor	Qty		1
	Input	w	80
	RLA	A	1
	Speed	r/min	850/700/550
Outdoor air flow (Max)		CFM	1766
Outdoor noise level (Max)		dB(A)	55
Throttle type			EXV
Outdoor unit	Dimensions (WxDxH)	inch	35.04 x 13.46 x 26.50
	Packing (WxDxH)	inch	39.17 x 15.67 x 29.13
	Net/Gross weight	inch	99.21/106.92
Refrigerant	Type		R454B
	Precharge	ft	24.6
Additional charge for 1/4 inch liquid pipe		oz	
Additional charge for 3/8 inch liquid pipe		oz	.7 oz/ft
Refrigerant piping	Liquid side/Gas side	inch	3/8" 3/4"
	Max. pipe length	ft	164'
	Max. difference in level	ft	82'
Ambient temperature	Cooling	F	-13~122
	Heating	F	-13~75

Cooper&Hunter products are subject to continuous improvements. Cooper&Hunter reserves the right to modify product design, specifications and information in this data sheet without notice and without incurring any obligations. Actual unit design may differ from images shown in this submittal sheet.

CH-ALT30HP24V-230VO + CH-ACL30-36B

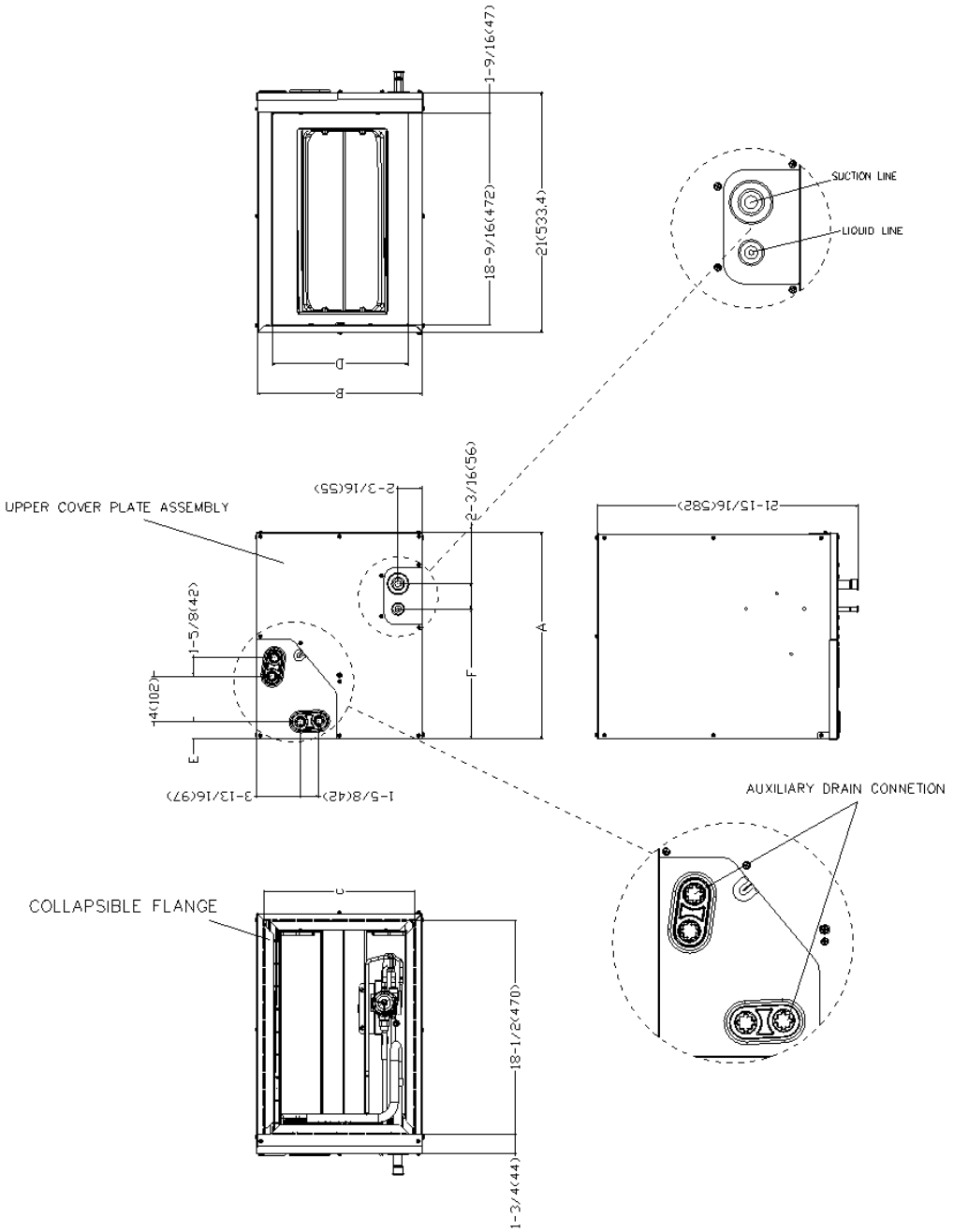

Dimensions \ Model(Btu/h)		24-A		36-A		36-B	
		inch	mm	inch	mm	inch	mm
A	Model Height	18	457	23-5/16	592	23-1/2	599
B	Model Width	14-1/2	368	14-1/2	368	17-1/2	445
C	Supply Air Opening Width	13-1/4	336	13-1/4	336	16-3/16	411
D	Return Air Opening Width	11-15/16	303	11-15/16	303	14-15/16	380
E	Condensate Drains Height	1-7/16	38	1-7/16	38	1-7/16	38
F	Liquid Line Height	11-3/8	290	17-15/16	455	16-3/8	417

Dimensions \ Model(Btu/h)		24-B		36-C			
		inch	mm	inch	mm		
A	Model Height	18	457	24	611		
B	Model Width	17-1/2	445	21	534		
C	Supply Air Opening Width	16-3/16	411	19-3/4	502		
D	Return Air Opening Width	14-15/16	380	18-7/16	468		
E	Condensate Drains Height	1-7/16	38	2-3/16	55		
F	Liquid Line Height	11-3/8	290	17-1/2	445		

Cooper&Hunter products are subject to continuous improvements. Cooper&Hunter reserves the right to modify product design, specifications and information in this data sheet without notice and without incurring any obligations. Actual unit design may differ from images shown in this submittal sheet.

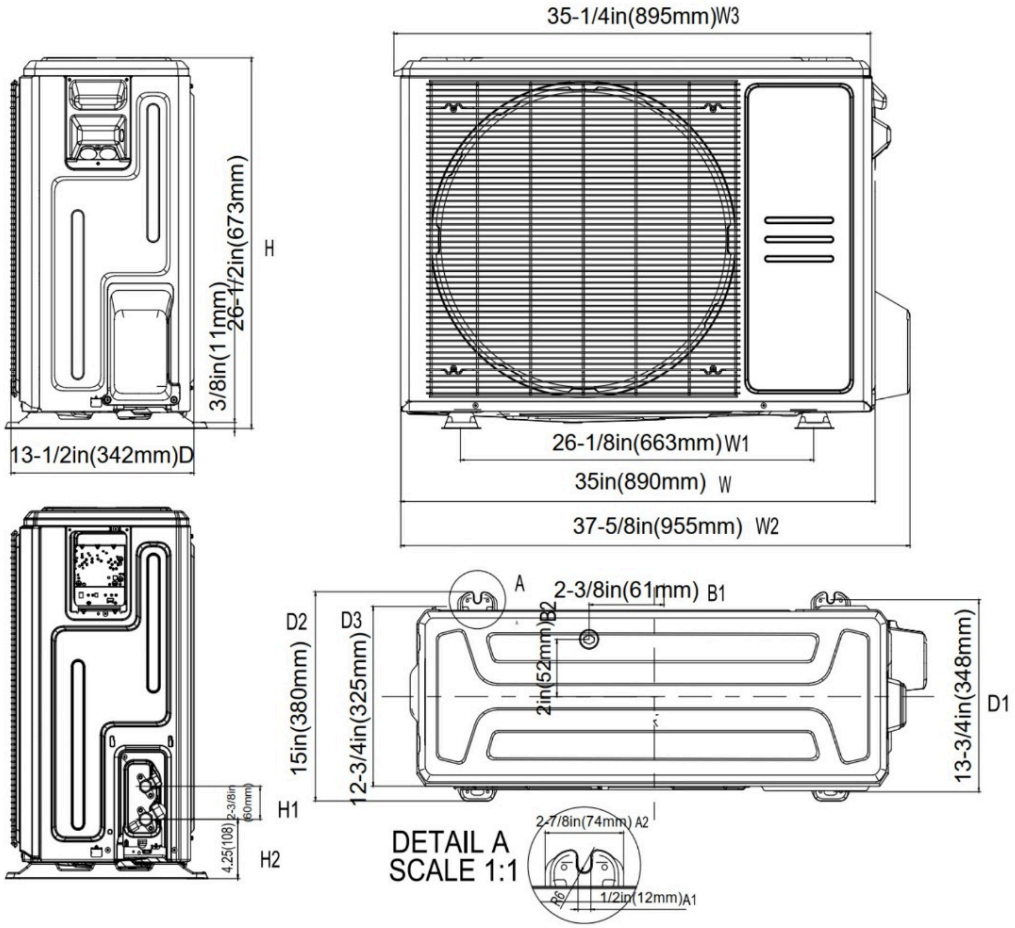

Installation Instruction For Outdoor Unit

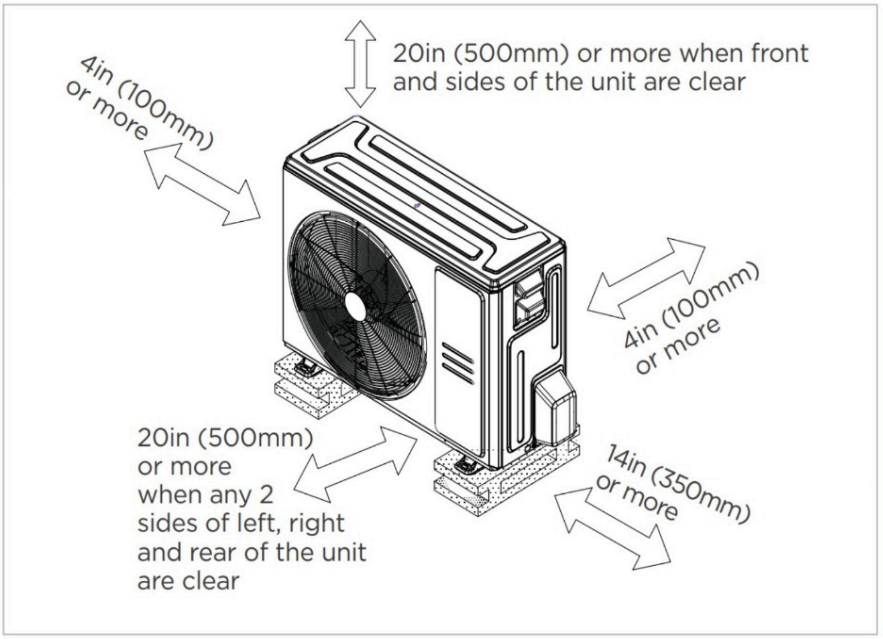

☑ Meets all spatial requirements shown in Installation Clearance Requirements above.

Cooper&Hunter products are subject to continuous improvements. Cooper&Hunter reserves the right to modify product design, specifications and information in this data sheet without notice and without incurring any obligations. Actual unit design may differ from images shown in this submittal sheet.