CH-ALT60HP24V-230VO + CH-MCL48-60C

Job Name:		**Date:**	
Location:		**Approval:**	
Engineer:		**Construction:**	
Submitted to:		**Unit #:**	
Submitted by:		**Drawing #:**	
Reference:			

KEY FEATURES:

- Heat pump operation for heating and cooling
- Inverter-driven variable-capacity compressor
- 24V communicating controls
- 1.5 to 5 ton capacities
- R-454B refrigerant
- High SEER2 efficiency
- Quiet, soft-start operation
- Multi-position indoor coil installation
- Compatible with existing furnaces
- TXV valve and flared connections
- GoldFin anti-corrosion aluminum coil
- R-454B refrigerant sensor
- Easy-access coil maintenance
- Efficient condensate drainage

NOTES:

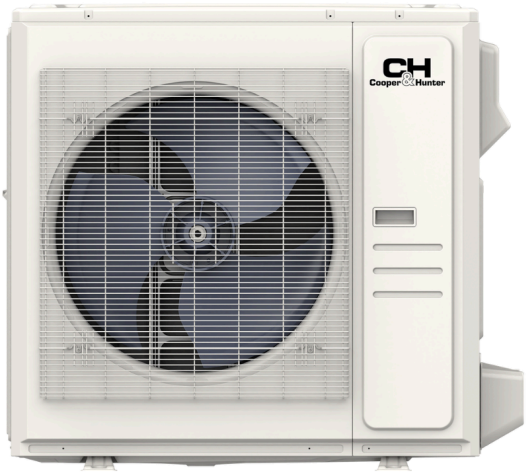

Cooper&Hunter products are subject to continuous improvements. Cooper&Hunter reserves the right to modify product design, specifications and information in this data sheet without notice and without incurring any obligations. Actual unit design may differ from images shown in this submittal sheet.

CH-ALT60HP24V-230VO + CH-MCL48-60C

Indoor Model			CH-MCL48-60C
Power supply		V, Ph, Hz	24V,60Hz,1Ph
Communication wiring		AWG	20x2
Cooling	Capacity	Btu/h	15,500~51,000
	Input	w	6,000(1,430~6,100)
	Rated current	A	24.1(3.3~24.5)
	EER/EER2	Btu/w	8.5
	SEER/SEER2	Btu/w	14.5
Heating at 47 °F	Capacity	Btu/h	10,600~50,000
	Input	W	1,210~5,190
	Rated current	A	6.0~20.7
	COP	W/W	2.68
	HSPF4/HSPF2-4		8
	HSPF5/HSPF2-5		6.5
Indoor fan motor	Qty		1
	Input		/
	RLA		/
Indoor air flow (Turbo/Hi/Med/Lo) (No duct)		CFM	/
ESP (range)		In.wg.	/
Indoor noise level (Hi/Med/Lo)		dB(A)	/
Dehumidification		L/H	8.4
Indoor unit	Dimensions (WxDxH)	inch	21-5/8x21-1/2x27-3/4
	Packing (WxDxH)	inch	31-1/8x25x25-5/8
	Net/Gross weight	lbs	97/115
Drainage water pipe diameter		inch	3/4"
Refrigerant piping (Liquid side/Gas side)		inch	3/8" 3/4"
Design pressure		PSIG	550 / 340
Controller			120N/24V
Room temperature	Cooling	F	60~90
	Heating	F	60~90

Cooper&Hunter products are subject to continuous improvements. Cooper&Hunter reserves the right to modify product design, specifications and information in this data sheet without notice and without incurring any obligations. Actual unit design may differ from images shown in this submittal sheet.

CH-ALT60HP24V-230VO + CH-MCL48-60C

Outdoor Model			CH-ALT60HP24V-230VO
Power supply		V, Ph, Hz	208-230V, 1Ph, 60Hz
Min. circuit ampacity		A	39
Max. fuse		A	40
Compressor	Model		KTQ420D1UMU
	Type		TWIN-ROTARY
	Brand		HIGHLY
	Capacity	Btu/h	N/A
	Input	w	6000
	Rated current (RLA)	A	24.1
	Refrigerant oil	oz	VG74
Outdoor fan motor	Qty		1
	Input	w	250
	RLA	A	1.2
	Speed	r/min	850/800/750/650
Outdoor air flow (Max)		CFM	3037
Outdoor noise level (Max)		dB(A)	65
Throttle type			EXV
Outdoor unit	Dimensions (WxDxH)	inch	38-9/16x16-3/8x38-3/8
	Packing (WxDxH)	inch	45-1/16x19-11/16x42-1/2
	Net/Gross weight	inch	193/224
Refrigerant	Type		R454B
	Precharge	ft	24.6
Additional charge for 1/4 inch liquid pipe		oz	
Additional charge for 3/8 inch liquid pipe		oz	.7 oz/ft
Refrigerant piping	Liquid side/Gas side	inch	3/8" 3/4"
	Max. pipe length	ft	246'
	Max. difference in level	ft	98.4'
Ambient temperature	Cooling	F	-13~122
	Heating	F	-13~75

Cooper&Hunter products are subject to continuous improvements. Cooper&Hunter reserves the right to modify product design, specifications and information in this data sheet without notice and without incurring any obligations. Actual unit design may differ from images shown in this submittal sheet.

Indoor Unit Dimension

Unit:inch(mm)

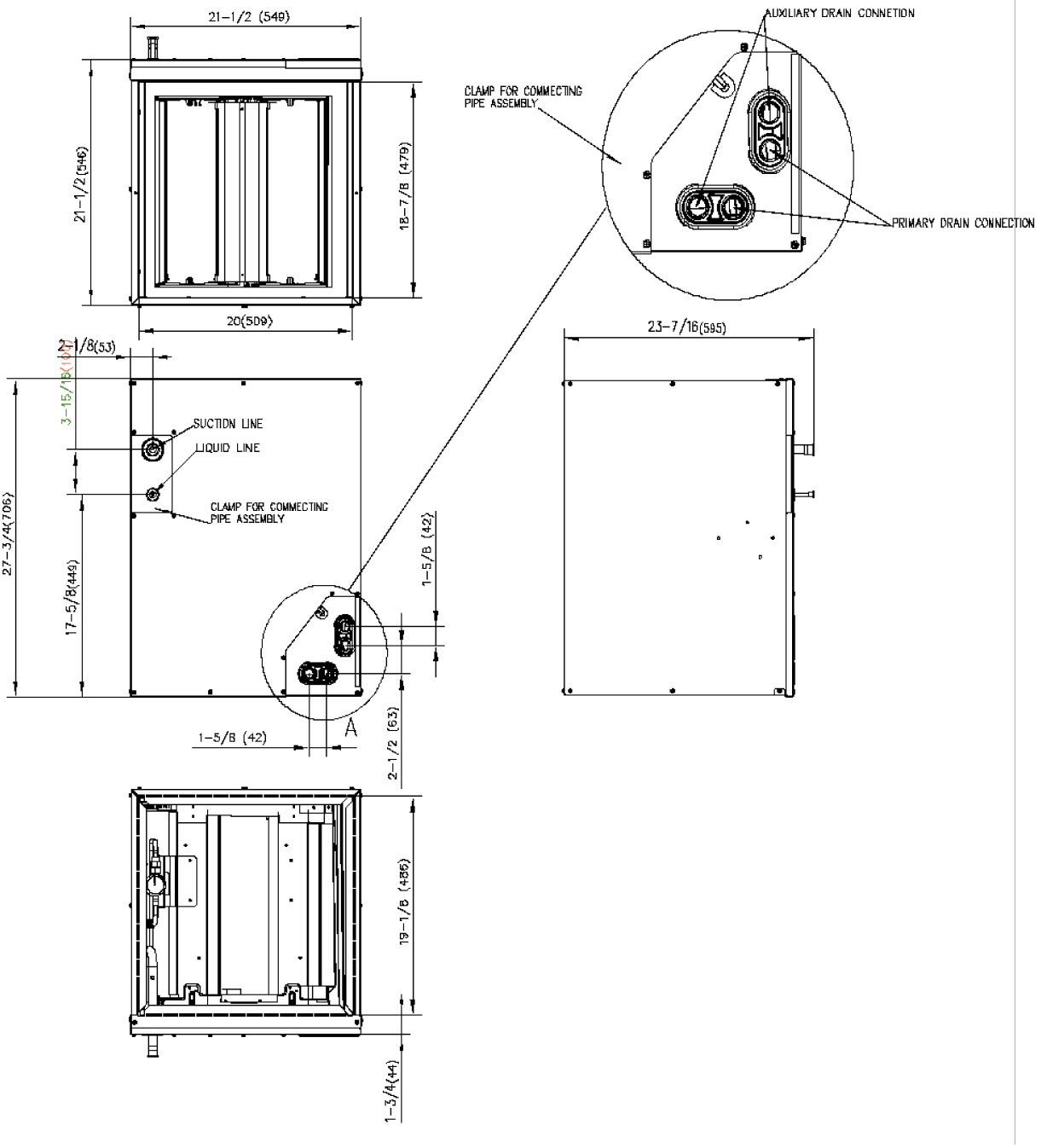

Model		60-C	
Dimensions		inch	mm
A	Model Height	27-3/4	706
B	Model Width	21-1/2	549
C	Supply Air Opening Width	20	508
D	Return Air Opening Width	19-1/16	486
E	Condensate Drains Height	1-5/8	42
F	Liquid Line Height	17-5/8	449

Cooper&Hunter products are subject to continuous improvements. Cooper&Hunter reserves the right to modify product design, specifications and information in this data sheet without notice and without incurring any obligations. Actual unit design may differ from images shown in this submittal sheet.

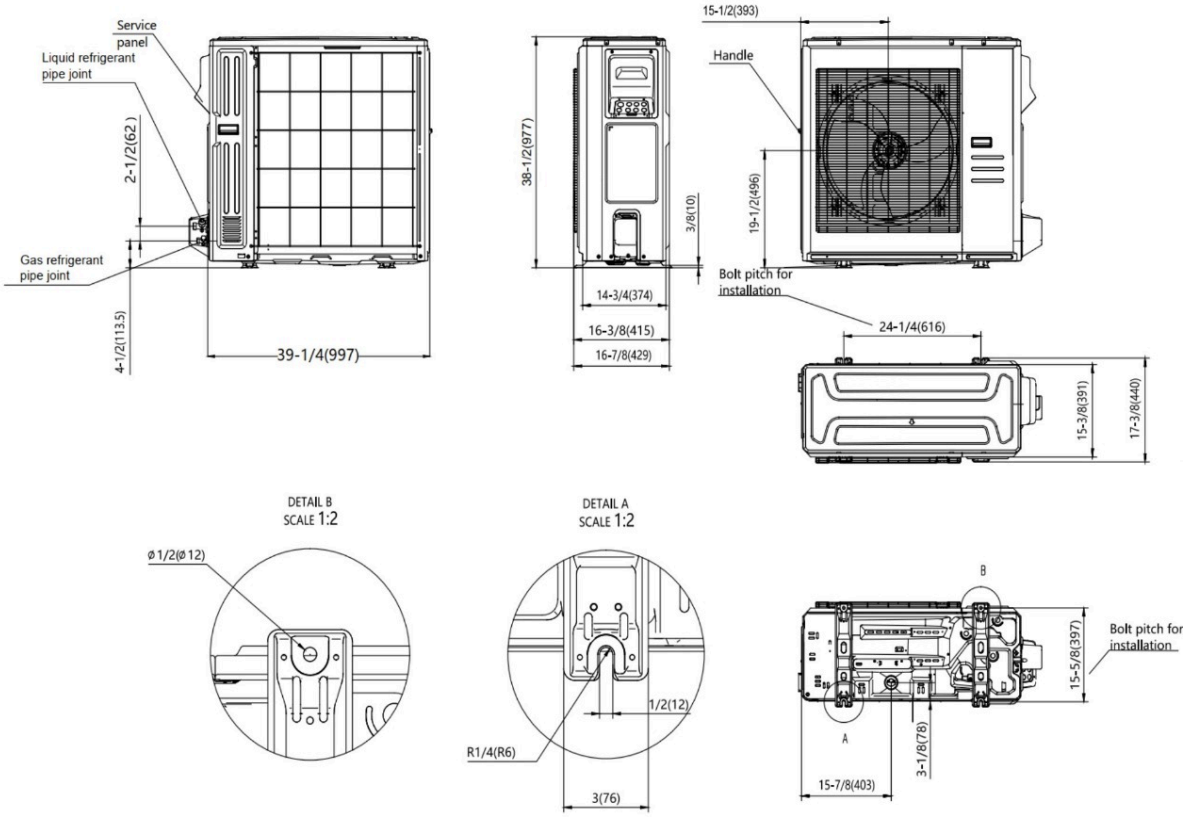

Installation Instruction For Outdoor Unit

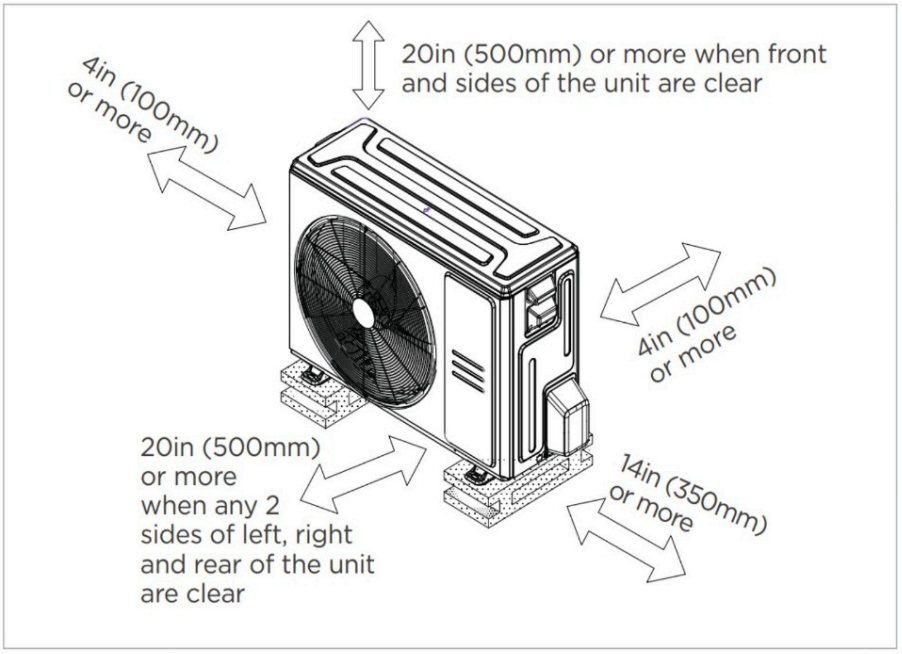

☑ Meets all spatial requirements shown in Installation Clearance Requirements above.

Cooper&Hunter products are subject to continuous improvements. Cooper&Hunter reserves the right to modify product design, specifications and information in this data sheet without notice and without incurring any obligations. Actual unit design may differ from images shown in this submittal sheet.